ITEM	DESCRIPTION	QTY	MATERIAL	REMARKS dimensions in mm
1	chain	2	stainless steel	dimensions as drawn
2	shackle	2	stainless steel	with safety nut and sunken head, article code #87221
3	ring	4	stainless steel	Ø 5 mm, inner dimensions max 16 x 9 mm
4	triangle	2	stainless steel	Ø 5 mm, dimensions as drawn
5	eye-bolt	4	stainless steel	simular to DIN580 M8 except for length thread
6	washer	4	stainless steel	M8 outer Ø 16 mm
7	safety nut	4	stainless steel	DIN 985 M8 safety type

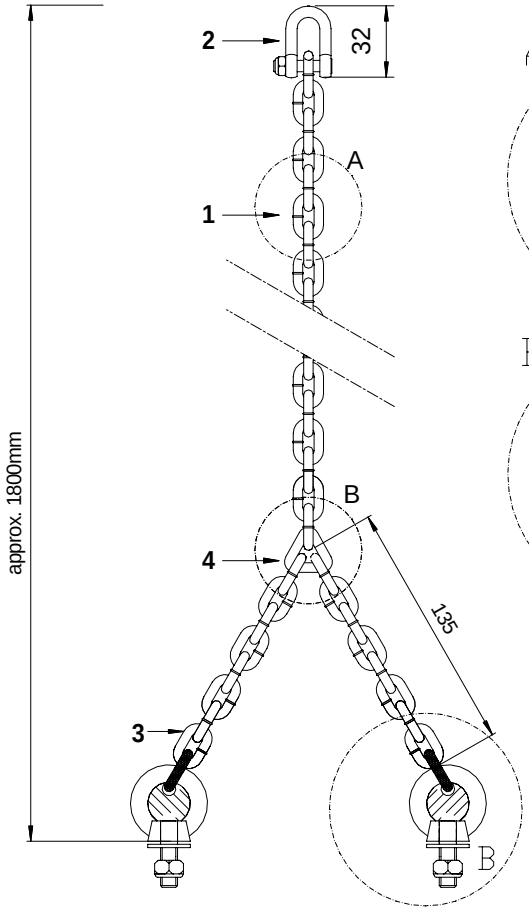

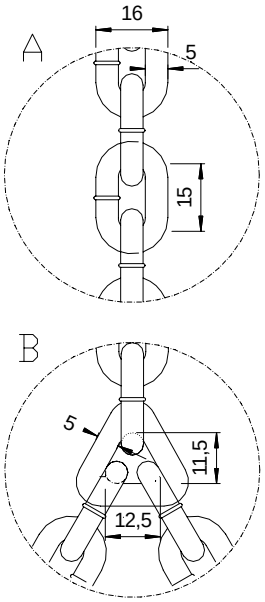

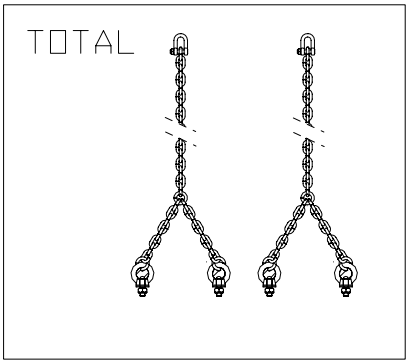

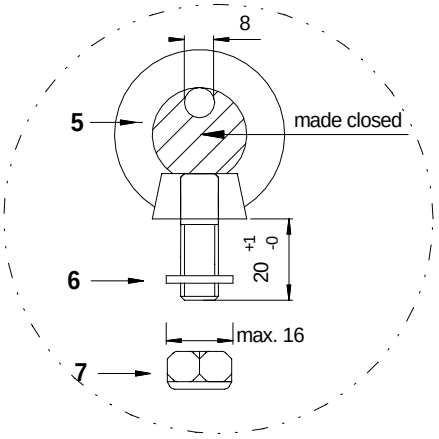
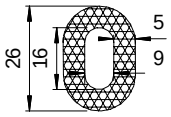
RING (part 3)